GENESIS AUTOMATION©
www.GenesisAutomationOnline.com

WRA240 SERIES

3PH AC - DC DIN RAIL MOUNTABLE POWER SUPPLY
INDUSTRIAL CONTROL EQUIPMENT

FEATURES

- 3 PHASE AC INPUT VOLTAGE
- SELV COMPACT DESIGN
- SHORT CIRCUIT PROTECTION
- INATERNAL INPUT FILER
- OVER TEMPERATURE PROTECTION
- PARALLEL FUNCTION AVAILABLE (SWITCH)
- 3 YEARS WARRANTY

c UL us LISTED IND. CONT. EQ. UL 508 | c UL us Class I, Div 2 | c UL us UL 60950-1 | EN 60950-1 | TÜV Rheinland Product Safety EN 61558-1 EN 61558-2-16 | CE

SELECTION CHART

WRA 240 - 24

Wattage — 24 : 24V OUT 48 : 48V OUT

MODEL LIST

MODEL NO.	INPUT VOLTAGE	OUTPUT WATTAGE	OUTPUT VOLTAGE	OUTPUT CURRENT	EFF. (min.)	EFF. (typ.)
Single Output Models						
WRA240-24	3ø 340~575 VAC	240 WATTS	+ 24 VDC	10 A	88%	90%
WRA240-48	3ø 340~575 VAC	240 WATTS	+ 48 VDC	5 A	89%	91%

SPECIFICATION

All Specifications Typical At Nominal Line, Full Load, 25°C Unless Otherwise Noticed

GENERAL

Characteristics	Conditions		min.	typ.	max.	unit
Switching frequency	Vi nom, Io nom			25		KHz
Isolation voltage	Input-Output		3,000 / 4,242			VAC / VDC
	Input-FG		1,500 / 2,121			VAC / VDC
	Output-FG		500 / 710			VAC / VDC
Isolation resistance	Input-Output, @ 500VDC		100			MΩ
Ambient temperature	Operating at Vi nom		-40		+ 71	°C
Derating (see derating curve)	Vi nom, from +61 to +71°C				2.5	% / °C
Storage temperature	Non operational		-40		+ 85	°C
Relative humidity	Vi nom, Io nom		20		95	% RH
Temperature coefficient	Vi nom, Io min				± 0.03	% / °C
MTBF	Bellcore Issue 6 @40°C, GB	24V		488,000		Hours
		48V		519,000		Hours
Altitude during operation	EN 60950-1				5,000	m
Dimension	Screw terminal type			L124 x W89 x D118.8		mm
Cooling	Free air convection					
Installation position	Vertical (other direction may derating using)					
Pollution degree				2		

INPUT SPECIFICATIONS

Characteristics	Conditions		min.	typ.	max.	unit
Nominal voltage *1				1ø or 3ø 380 / 480 VAC		
Rated input voltage	Io nom		400		500	VAC
Absolute input max. range	Ta min ... Ta max,	AC in	340		575	VAC
	Io nom	DC in	480		820	VDC
Input current	Vi : 400 / 500 VAC, Io nom			0.65 / 0.55		A

*1. Single phase input is permissible, but output load is derated to 75%

3046 Home Road. Powell, OH 43065 P: (740) 917-5781 F: (740) 917-5791 www.GenesisAutomationOnline.com Sales@GenesisAutomationOnline.com

SPECIFICATION

All Specifications Typical At Nominal Line, Full Load, 25°C Unless Otherwise Noticed

INPUT SPECIFICATIONS

Characteristics	Conditions		min.	typ.	max.	unit
Rated input current	Vi : 340 VAC, Io nom				0.85	A
Line frequency	Vi nom, Io nom		47		63	Hz
Inrush current	Vi nom, Io nom			20	25	A
Power dissipation	Vi : 400 VAC, Io nom	24V model		30		W
		48V model		24		W
Leakage current	Input-Output				0.25	mA
	Input-FG				3.5	mA
P.F.C. (Passive)	Vi nom, Io nom			0.55		

OUTPUT SPECIFICATIONS

Characteristics	Conditions		min.	typ.	max.	unit
Output voltage accuracy (Adjusted before shipment)	Vi nom, Io max		0		+ 1	%
Minimum load	Vi nom		0			%
Line regulation	Io nom, Vi min ...Vi max				± 1	%
Load regulation	Vi nom, Io min ...Io nom	single mode			± 1	%
		parallel mode			± 5	%
Voltage trim range	Vi nom, 0.8 Io nom	24V model	22.5		28.5	VDC
		48V model	47		56	VDC
Rated continuous loading	Vi nom	24V model	10 A @ 24Vdc / 8.4 A @ 28.5Vdc			
		48V model	5 A @ 48Vdc / 4.2 A @ 56Vdc			
Hold up time	Vi nom , Io nom		20			ms
Turn on time	Vi nom, Io nom				1,000	ms
	Vi nom, Io nom → with 7000 μF CAP				1,500	ms
Rise time	Vi nom, Io nom				150	ms
	Vi nom, Io nom → with 7000 μF CAP				500	ms
Fall time	Vi nom, Io nom				150	ms
Transient recovery time	Vi nom, 1~0.5 Io nom				2	ms
Ripple & noise	Vi nom, Io nom, BW = 20MHz				100	mV
Power back immunity	Vi nom, Io nom	24V model	35			VDC
		48V model	63			VDC
Capacitor load	Vi nom, Io nom	24V model			7,000	μF
DC ON indicator threshold at start up (Green LED)	Vi nom, Io nom	24V model	17.6		19.4	VDC
		48V model	37		43	VDC
DC LOW indicator threshold after start up (Red LED)	Vi nom, Io nom	24V model	17.6		19.4	VDC
		48V model	37		43	VDC
Parallel operation	0.1 Io min ~ 0.9 Io max				2	unit
Efficiency	Vi nom, Io nom, Po / Pi		Up to 91%, See model list and typ efficiency curve			

CONTROL AND PROTECTION

Characteristics	Conditions		min.	typ.	max.	unit
Input fuse			2 A / 600 VAC internal / phase			
Internal surge voltage protection	IEC 61000-4-5		Varistor			
Rated over load protection	Vi nom (see typ current limited curve)		120		140	%
Power Rdy (for 24V model only)	Threshold voltage of contact closed(at start up)		17.6		19.4	VDC
	Electrical isolation		500			VDC
	Contact rating at 60VDC				0.3	A
Over voltage protection	Vi nom, 0.8 Io nom (Auto Recovery)	24V model	30		33	VDC
		48V model	60		66	VDC
Output short circuit			Hiccup mode			
Over temperature	Detect on heat sink, shut down O/P voltage, recovers automatically after temperature goes down.		100		110	°C
Degree of protection			IP20			

3046 Home Road. Powell, OH 43065 P: (740) 917-5781 F: (740) 917-5791 www.GenesisAutomationOnline.com Sales@GenesisAutomationOnline.com

SPECIFICATION

All Specifications Typical At Nominal Line, Full Load, 25°C Unless Otherwise Noticed

APPROVALS AND STANDARDS

UL / cUL	UL 508 Listed UL 60950-1 Recognized ISA 12.12.01(Class I, Division 2, Groups A, B, C and D)
TUV	EN 60950-1 EN 61558-1, EN 61558-2-16 (meet EN 60204-1)
CE	EN 61000-6-3, EN 55022 Class B, EN 61000-3-2, EN 61000-3-3 EN 61000-6-2, EN 55024, EN 61000-4-2 Level 4, EN 61000-4-3 Level 3 EN 61000-4-4 Level 4, EN 61000-4-5 L-N Level 3, L / N-FG Level 4 EN 61000-4-6 Level 3, EN 61000-4-8 Level 4, EN 61000-4-11 ENV 50204 Level 2, EN 61204-3
CQC	GB4943.1, GB9254, GB17625.1
Vibration resistance	meet IEC 60068-2-6 (Mounting by rail : 10-500 Hz, 2G, along X, Y, Z each Axis, 60 min for each Axis)
Shock resistance	meet IEC 60068-2-27 (15G, 11ms, 3 Axis, 6 Faces, 3 times for each Face)

PHYSICAL CHARACTERISTICS

Case size	Screw terminal type 124 x 89 x 118.8 mm (4.88 x 3.5 x 4.68 inches)
Case material	Metal
Weight	1100g
Packing	1.18kg ; 16pcs / 20kg / 2.01CUFT

MECHANISM & PIN CONFIGURATION

mm [inch]

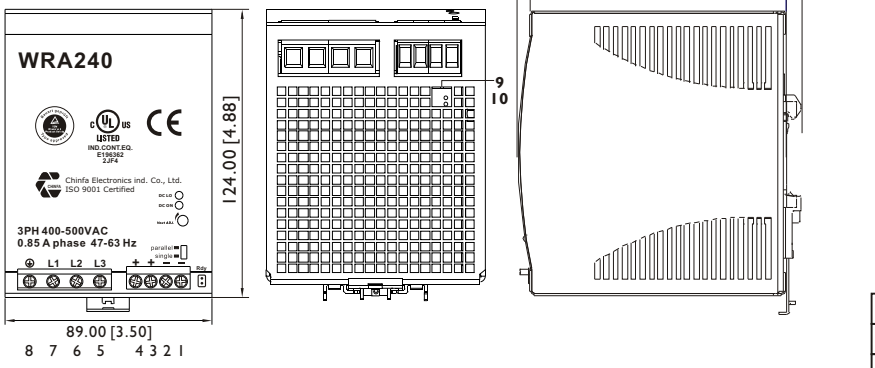

CONSTRUCTION

Easy snap-on mounting onto the DIN-Rail (TS35/7.5 or TS35/15), unit sits safely and firmly on the rail.

INSTALLATION

Ventilation / Cooling
Normal convection
All sides 25mm free space
For cooling recommended
Connector size range
AWG24-10 (0.2~4mm^2) flexible / solid cable,
-Input connector can withstand torque at maximum 9 pound-inches.
-Output connector can withstand torque at maximum 5.5 pound-inches.
8 m/m stripping at cable end recommends
Use copper conductors only, 60 / 75°C

GENERAL TOLERANCE	
0.00[0.00] - 30.00[1.18]	±0.30[0.01]
30.00[1.18] - 120.00[4.72]	±0.50[0.02]
120.00[4.72] - 400.00[15.75]	±0.80[0.03]

PIN ASSIGNMENT

PIN NO.	Designation		Description
1, 2	OUT	V -	Negative output terminal
3, 4		V +	Positive output terminal
5	IN	L3	Input terminals
6		L2	Input terminals
7		L1	Input terminals
8		⏚	Ground this terminal to minimize high-frequency emissions
9	OUT	RDY	A normal open relay contact for DC ON level control
10			(Never connect except 24V model)
	OTHER	DC ON	Operation indicator LED
		DC LO	DC LOW voltage indicator LED
		Vout ADJ.	Trimmer-potentiometer for Vout adjustment
		S / P	Single / Parallel select switch

3046 Home Road. Powell, OH 43065 P: (740) 917-5781 F: (740) 917-5791 www.GenesisAutomationOnline.com Sales@GenesisAutomationOnline.com

CIRCUIT SCHEMATIC

• Block diagram for WRA240 series

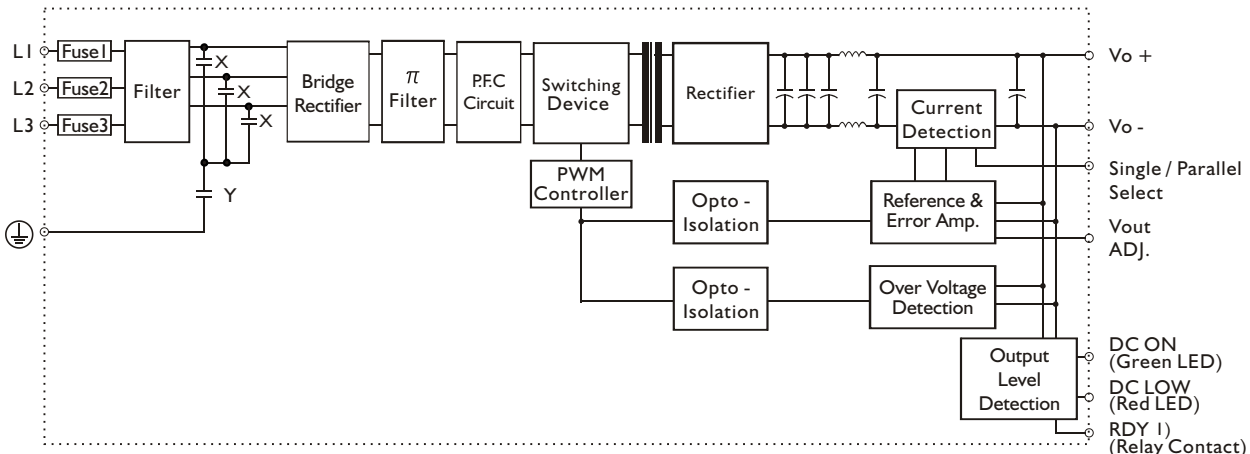

Note: 1) For 24V Model Only

TYP. CURRENT LIMITED CURVE

WRA240-24 / 400Vac

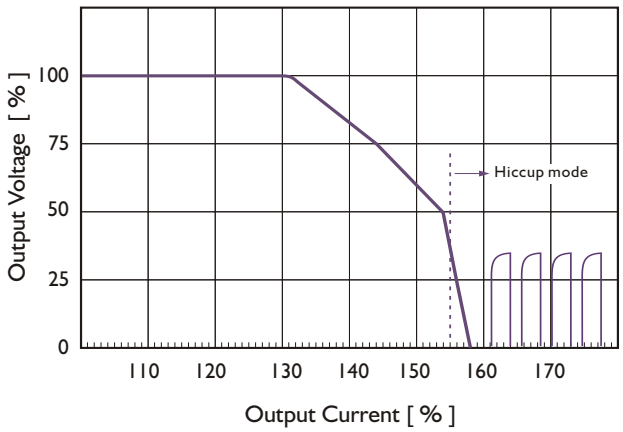

WRA240-24 / 500Vac

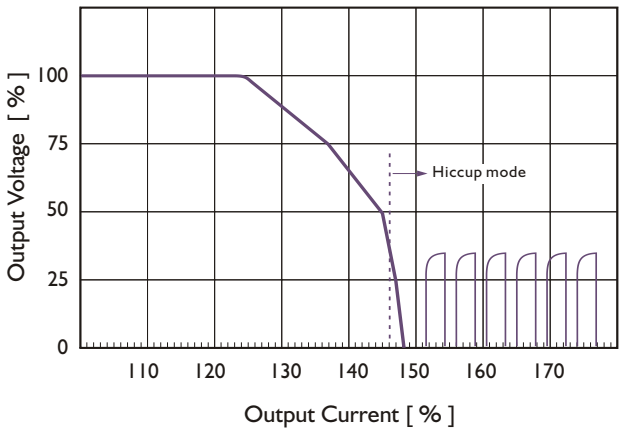

DERATING CURVE

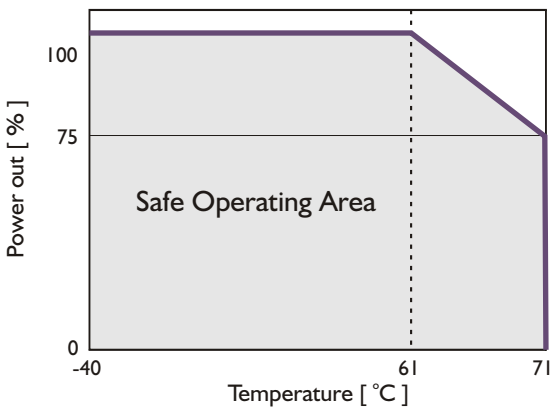

TYP. EFFICIENCY CURVE

WRA240-24

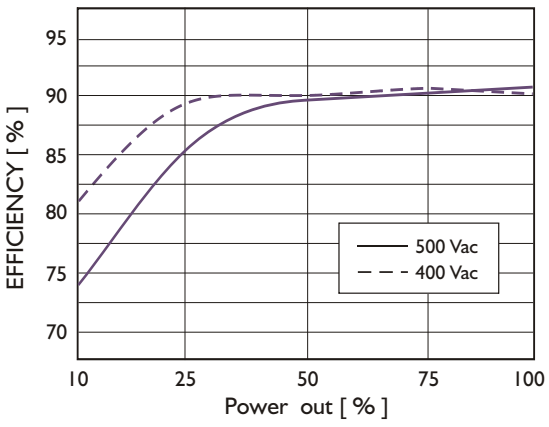

3046 Home Road. Powell, OH 43065 P: (740) 917-5781 F: (740) 917-5791 www.GenesisAutomationOnline.com Sales@GenesisAutomationOnline.com